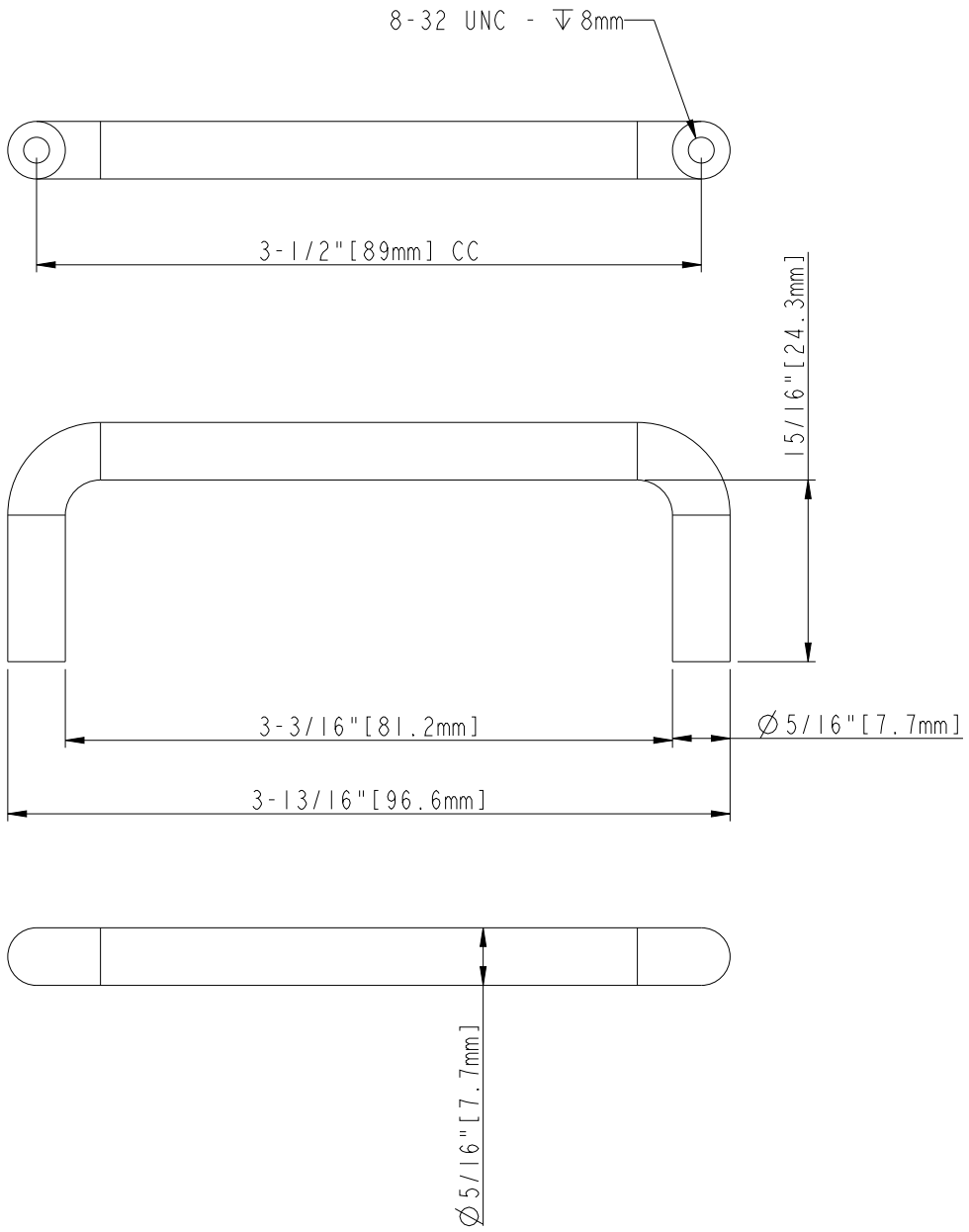

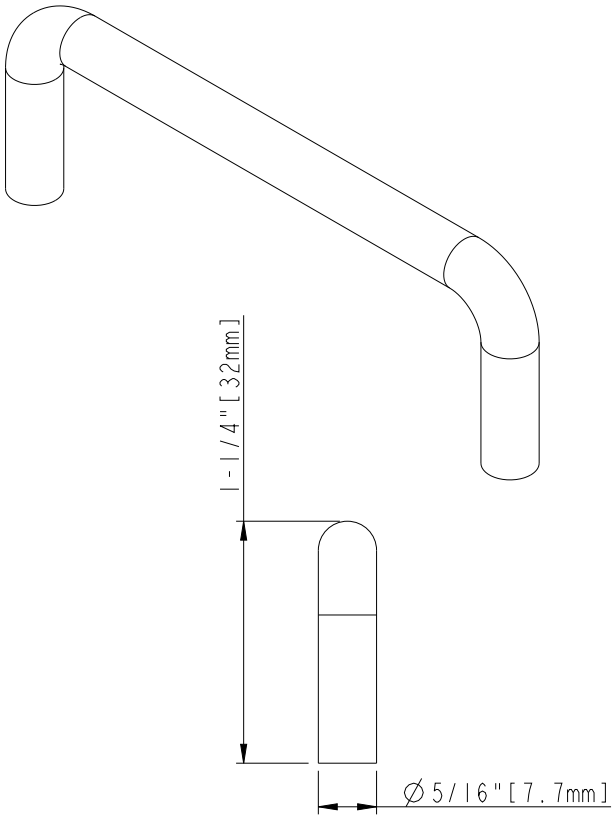

ACCESSORY:
SCREW:8-32X1" 2PCS
BREAK AWAY SCREW:8-32x45 2PCS
ALL SCREW MATERIAL:STEEL-SAE1006