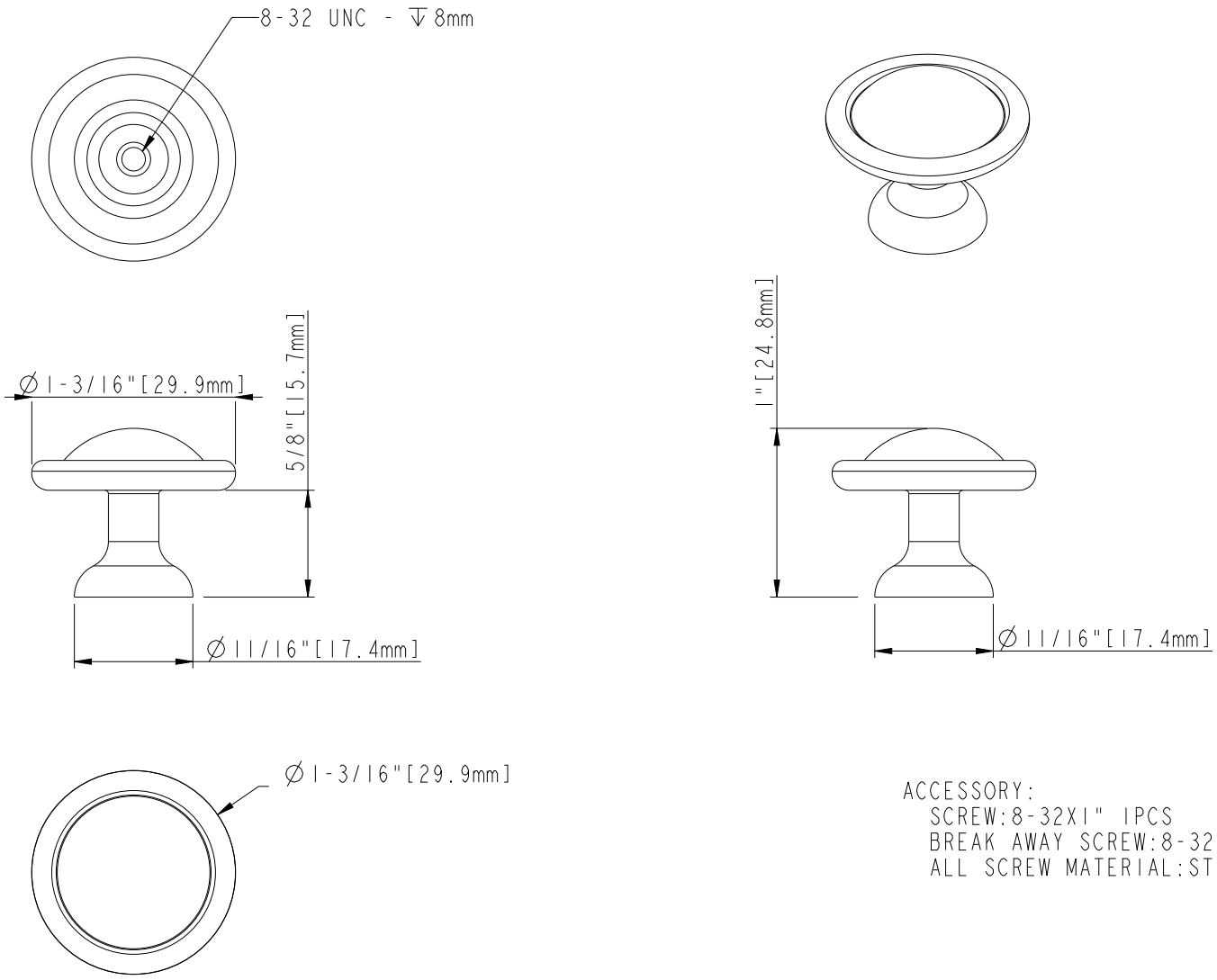

ACCESSORY:
SCREW:8-32X1" 1PCS
BREAK AWAY SCREW:8-32x45 1PCS
ALL SCREW MATERIAL:STEEL-SAE1006